Journal of Environmental Sustainability

Volume 5 | Issue 1 Article 4

2017

Pollution Prevention in the Great Lakes Basin: Working with Pulp & Paper Manufacturers

Eugene Park
NY State Pollution Prevention Institute, Rochester Institute of Technology, expasp@rit.edu

Journal of
Environmental Sustainability
RESEARCH ARTICLE

Pollution Prevention in the Great Lakes Basin: Working with Pulp & Paper Manufacturers

Eugene Park
Rochester Institute of Technology
expasp@rit.edu

ABSTRACT: In response to growing concerns over persistent toxic substances in the Great Lakes, new initiatives are in place to address and mitigate pollutant loadings to these large natural waterbodies. With support from the U.S. Environmental Protection Agency and New York Department of Environmental Conservation, the New York State Pollution Prevention Institute (NYSP2I) worked with pulp & paper companies in the Great Lakes Basin in an effort to find solutions to reduce environmental impacts from this industry sector. Based on currently available EPA toolkits, NYSP2I developed and utilized an assessment tool called Lean, Energy, and Environment (LE2). Five different paper manufacturers participated in this project and received technical assistance from NYSP2I to identify and implement process modifications. Significant reduction opportunities in energy, water and chemical use were identified, some of which were implemented. The results of this project serve as a working template to continue pollution prevention work in the Great Lakes Basin.

I. INTRODUCTION

I.I The Great Lakes

The Great Lakes, despite containing over a fifth of the earth's total fresh surface water, are relatively sensitive to the effects of a wide range of pollutants. Major contributors to stresses on these lakes include toxic substances and nutrient pollution, invasive species, and habitat degradation. Sources of such pollution include runoff (dirt, road salt, oil, and other pollutants from motor vehicles; soil, phosphate and nitrate fertilizers; and chemical pesticide residues from agricultural activities), waste from cities, discharges from industrial sites and wastewater treatment facilities, and leachate from solid waste disposal sites. In addition, the vast, exposed water surface area provides unobstructed pathways for the exchange of atmospheric gases and pollutants entrained in rain, snow, or dust. While all of the pollutant stressors are interconnected and often compounding by nature, this paper focuses primarily on how the impacts of pollution may be reduced or avoided in the pulp and paper industry.

The New York State Pollution Prevention Institute (NYSP2I), a state-supported industry technical assistance program based out of the Rochester Institute of Technology, endeavors to prevent or reduce industrial pollution through identification and implementation of cost-effective process modifications. The work performed in this article was primarily funded by the United States Environmental Protection Agency (EPA) with supplemental support from the NY State Department of

Environmental Conservation (DEC). Companies located in the Great Lakes Basin were the focus of this project (Figure 1).

Figure 1: Great Lakes Basin in NY State[1]

I.II Project Background

The US EPA and the Canadian Government's Environment Canada collaboratively developed the Great Lakes Binational Toxics Strategy (GLBTS), an agreement that aims to virtually eliminate persistent toxic substances in the lakes[2]. While this objective requires the deployment of several different strategies, one primary tool focuses on pollution prevention (P2). A range of persistent toxic substances has been identified by GLBTS to be harmful to the Great Lakes Ecosystem. Research conducted by NYSP2I revealed that four of the chemicals identified by GLBTS—(1) Polycyclic Aromatic Compounds (PACs), (2) Polychlorinated Biphenyls, (3) Mercury, and (4) Benzo(g,h,i) perylene—are also listed as emissions from paper manufacturing companies located in the New York State Great Lakes watershed. These releases are reported through the EPA's Toxics Release Inventory (TRI) Program, which requires reporting when a company handles more than 10,000 pounds or releases more than 500 pounds/year of a listed substance, thus indicating that these releases are of significant magnitude[3]. Three of these substances—all except mercury—are classified as "probably carcinogenic" or "reasonably expected to be carcinogenic"[4]. Initial research also suggests that a major source of PACs and Benzo(g,h,i)perylene is the combustion of fuels in boilers for steam and energy in the pulp making process[5]. Thus, it is reasonable to presume that reduction of energy use in pulp & paper companies may help to mitigate releases of GLBTS-listed chemicals.

Reducing or eliminating waste requires a holistic approach that addresses each aspect of a company's manufacturing process in a systematic and comprehensive manner. NYSP2I's approach includes detailed assessments, which are designed to provide sufficient information to understand the causes of toxic releases and to identify opportunities for reduction in chemical, energy and water use. A comprehensive understanding is needed so that effective, implementable solutions may be developed. This study describes the results of several projects in the pulp & paper sector where detailed assessments were performed and viable implementation measures identified, the results of which can be disseminated to similar companies located both within the Great Lakes watershed and nationwide.

I.III Project Overview

With support from the United States Environmental Protection Agency (EPA) and the New York State Department of Environmental Conservation, NYSP2I conducted a project titled Toxics Reduction and Sustainability in Paper Manufacturing from 2011-2016, focusing on pulp & paper companies located within the NYS Great Lakes Watershed. In partnership with CITEC, Inc., the designated Manufacturing Extension Partnership for the eight-county North Country region of NY State, this project sought to provide technical assistance to regional pulp and paper manufacturing companies with significant pollution challenges and opportunities. Project objectives included identifying and implementing solutions to reduce use of toxic

chemicals, minimizing hazardous waste and wastewater, and reducing energy consumption in support of the ultimate goal to mitigate pollutants released into the Great Lakes.

Production assessments were conducted at four regional manufacturing facilities to identify improvement opportunities. Based on the results of these assessments, three of the companies completed process change and technology implementation projects that focused on chemical replacement and reducing energy and water usage. One additional company, which did not participate in the initial NYSP2I assessment but was already involved in a state energy audit program, did work with NYSP2I to implement energy savings modifications. Therefore, a total of five different pulp & paper companies partook in this project with four companies implementing changes.

II. METHODOLOGY

II.I Participant characterization

Preliminary questionnaires called Data Intake Forms (DIF) were sent to eight different pulp and paper manufacturers in the Great Lakes basin to identify and determine potential participants. The DIF is used to collect baseline information, including company/business demographics (number of employees, size of facility, markets served), resource utilization metrics (raw material, water, and energy usage), waste generation details (types of permits, quantities disposed/discharged) and operational practices (recycling, scrap rate). Five of these eight companies returned completed DIFs, suggesting their interest in participation. NYSP2I developed separate proposals for each company, four of which were accepted and contracts finalized.

II.II Assessment tools

An NYSP2I-developed assessment tool called Lean, Energy, and Environment (LE2) was used as the primary model for each facility assessment. LE2 is a hybridization of two EPA programs—Lean & Environment and Lean & Energy (Figure 2)—that offers practical strategies and techniques for each of its three tiers: (1) improving results through Lean

Figure 2: EPA Toolkits Used for LE2 [6,7]

manufacturing principles, (2) achieving environmental performance goals and (3) reducing energy

use, costs and risk. Combining these programs provides an ideal framework for a comprehensive assessment of a manufacturing process, balancing the objectives of all three areas to achieve optimal results. The LE2 Assessment is comprised of three main components: facility site visit, analysis and research, and final recommendation.

II.III Assessments

Detailed on-site assessments were conducted at four participating companies. Based on the LE2 framework, the assessments identified and quantified opportunities for improvement that could result in greater manufacturing efficiencies, reductions in toxic chemical usage and release, reductions in energy and water usage, and an overall reduction in cost. During facility site visits, assessments focused on the specific processes each company identified as having the greatest potential for improvement. Subsequent input-output analyses of specific environmental media and manufacturing process data facilitated the identification of potential areas of improvement. Potential alternative processes, technologies, and equipment were also investigated. Based on these analyses and accompanying solution development research, the most cost-effective opportunities within each company's acceptable ROI (return on investment) range were presented to company management. These recommendations included potential process and/or productivity improvements as well as reductions in toxic emissions, energy, and water use. Annual cost savings were estimated and reviewed with management to determine if further optimization studies were warranted.

III. RESULTS AND DISCUSSION

III.I Company #1

For Company #1 (C1), NYSP2I and CITEC developed a baseline model of papermaking process water use and discharge, tested wastewater quality, and evaluated the feasibility of water recovery for reuse with commercially available technologies. Analysis of water usage data indicated that wastewater drained from the forming, pressing, and drying areas is viable for reuse as it contains only small amounts of fiber and surfactant. Based on estimates of water use and discharge, recoverable water at C1 equates to approximately 43,350,000 gallons annually. Recovery can be achieved through the installation of a self-cleaning filtration system, which may range in cost from about $5,000 to $14,000.

NYSP2I and CITEC also performed energy use assessments. An early-stage opportunity for energy use reduction was identified in the potential replacement of the current inlet water pump with a more appropriately sized and efficient unit. Based on company production data, it was determined that the use of variable frequency drive (VFD) and a lower horsepower (HP) motor could reduce total electricity usage by 143,000 kWh annually, resulting in a savings of $17,000 per year. The total installed cost of this upgrade was estimated to be $20,000, resulting in a simple payback period of less than two years (Figure 3).

Figure 3: VFD Drive Installed

Based on the project final report NYSP2I, C1 installed a self-cleaning filtration system to recover process wastewater. Implementation took place in late September 2013, with testing and system adjustment in October 2013 (Figure 4). The system became fully operational in January 2014. Based on follow-up measurements and updated production figures provided by the company, it is estimated that C1 realizes actual water recovery of 15.6 million gallons per year. Total cost of installation at C1 was $21,265.

As part of the assessment at C1, the project team also evaluated chemical use. Nonylphenol ethoxylate (NPE) emulsifiers were used as a process surfactant in the operation at C1 but have been identified as a high risk chemical to aquatic organisms and as a precursor to an endocrine system disruptor[8]. Alternative NPE-free surfactants were identified as a drop-in replacement which is more expensive per pound but much less is needed to achieve the same results, so the effective annual cost for the new replacement is actually lower than the NPE-emulsifier. Switching to NPE-free surfactant has eliminated 361 pounds/year of NPE releases.

Figure 4: Self-cleaning Filtration System

III.II Company #2

There were three primary goals associated with the assessment at Company 2 (C2): (1) identify opportunities to reduce water use and promote recovery, (2) review available options to reduce use of sulfuric acid, and (3) find alternatives to solid waste (sludge) disposal. One potential water savings opportunity was identified that involved reusing vacuum pump seal water, as opposed to single use and discharge. Up to 727 million gallons/year of water could be saved.

C2 was most interested in re-purposing a screw press from a different C2 facility to further dewater primary sludge (Figure 5). Viable pathways for dewatered sludge material, including animal bedding, offer the potential to convert waste disposal into a revenue stream and thus reduce cost burden and liabilities. However, due to timing and operational constraints, implementation could not be pursued under the auspices of this project. In any case, C2 did acknowledge that because of the water mapping exercise undertaken as part of the LE2 assessment, the company incorporated more sustainable decisions in designing and installing a new production line. Water savings associated with this new design are not yet quantified.

Figure 5: Screw Press (courtesy Huber Technology[9])

III.III Company #3

At Company 3 (C3), the three primary goals of the assessment included: (1) characterize the condensate material exiting evaporator equipment, (2) investigate the use of steam stripping technology to recover ammonia from the condensate, and (3) identify opportunities to recover and reuse heat from the scrubber that controls biomass boiler emissions.

Upon completion of the assessment, while a cost-effective approach to recover ammonia could not be developed, a viable opportunity for heat recovery and subsequent energy savings was identified. C3's power plant uses waste wood to fuel a biomass boiler, where a wet scrubber is used to treat flue gas before it is released to the atmosphere (Figure 6). A heat exchanger installed in this area (noted in red color) would enable C3 to recover heat from the scrubber's water recirculation loop to preheat the plant's hot water loop in the summer, and warm water loop in the winter. This modification would reduce the need to create low-pressure steam to heat facility water

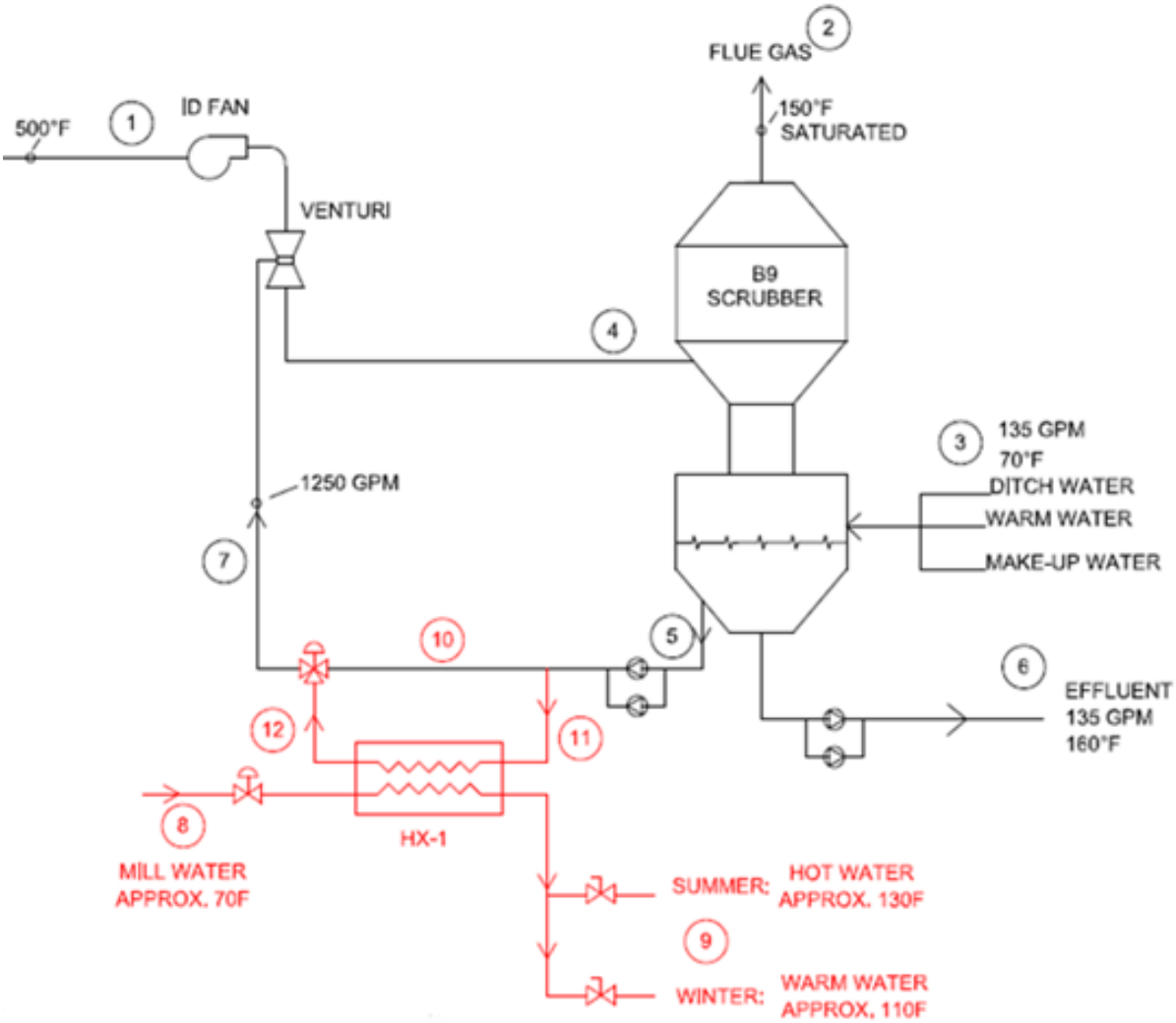

Figure 6: Wet Scrubber

loops, translating directly to savings in natural gas purchases (159,344 therms/year).

III.IV Company #4

The assessment at Company 4 (C4) resulted in the identification of four potential opportunities: (1) distillation of waste solvent for reuse; (2) use of a boiler stack economizer to pre-heat water for the boiler; (3) substitution of a high-pressure blower with a vacuum pump for drying paper; and (4) the installation of a whitewater self-cleaning filter to recover warm, clean water for reuse on the wet end of the paper machines. Potential outcomes include toxics reduction, as well as natural gas, electricity, and heat savings.

While potential energy savings were estimated to be 180,208 kWH and 63,100 therms/year, implementation was deemed not to be cost-effective. C4 decided to move forward with distillation technologies for waste solvent. Based on the completed assessment, it was estimated that annual cost savings would be close to $9,000 annually. In addition, nearly 1,000 gallons annually of acetone and methanol (combined total) could be recovered for reuse. C4 management discussed their application with a manufacturer of solvent recycling systems and purchased a unit. Installation was completed in November 2014 (Figure 7).

Early distillation results suggest that generation of hazardous waste will drop by a minimum of two-thirds. This estimate is derived from waste composition analysis that suggests phenolic solids—the primary pollutant in solvent waste and a known toxin to central nervous and renal systems—represents approximately one-third (or less) of the waste solution before distillation[10]. As a result, annual hazardous waste production should drop from 16 to 6 drums (9827 lbs. to 3685 lbs., 6578 lbs. reduction). Based on a market purchase cost of $5.24/gallon for acetone and $1.58/gallon for methanol, the value of the recovered solvent is approximately $1,513. Combined with avoided hazardous waste disposal costs, annual savings are expected to be $3,824. Total system cost was $15,000.

III.V Company #5

Company #5 (C5) had not participated in the initial assessment phase of the project but had already worked closely with the New York State Energy Research and Development Authority (NYSERDA) FlexTech Program in order to identify and implement cost effective and energy efficient opportunities at the facility. Previously, C5's high pressure shower pumps were operated at fixed speeds, but an opportunity was identified in the FlexTech Energy Assessment to replace the

Figure 7: Distillation Unit (far left), Used Solvent (center), Recovered Solvent (far right)

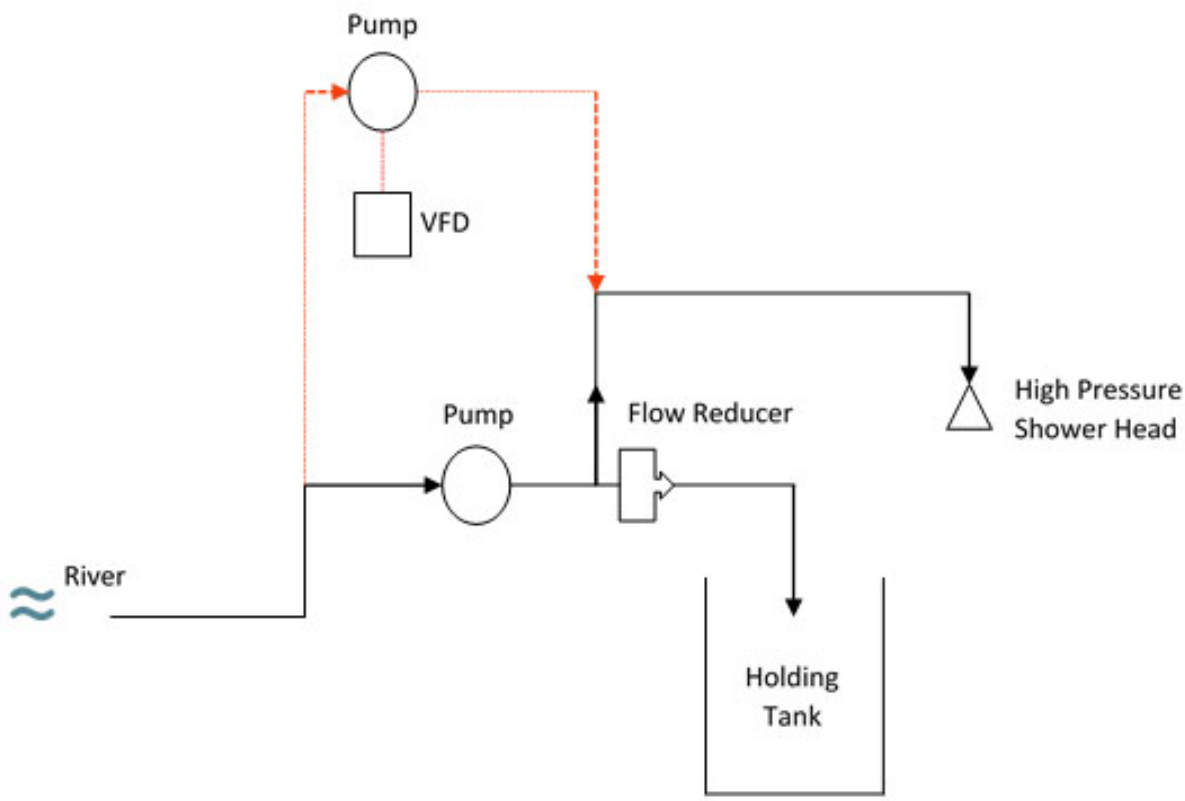

Figure 8: New Pump and VFD Installed to Save Energy

high pressure shower pumps and fan motors with variable frequency drives (VFDs) and inverter duty motors.

NYSP2I worked with C5 to install an inverter duty motor, a VFD, and a new pump to supply the high pressure showers (Figure 8). Based on the data collected, changing equipment would save 158,148 kWh per year, resulting in projected annual savings of $7,117.

IV. CONCLUSION

Based on these assessments, NYSP2I was able to identify viable opportunities for several pulp & paper companies to reduce energy and water usage, as well as mitigate use and release of toxic substances that could deleteriously affect the Great Lakes ecosystem. In total, five different companies participated in the EPA and DEC-funded project which included four assessments and four implementation projects. The results in terms of potential and actual reductions for the relevant environmental impact categories can be seen in Table 1. While various potential impact reduction measures were identified, not all approaches were deemed cost-effective and were not implemented.

Ultimately, this project serves to promote sustainability within the Great Lakes Basin through the detailed pollution prevention work completed for several pulp & paper manufacturers. Within this industry sector, there is increased awareness of 1) the environmental impacts associated with paper manufacturing and 2) the different methodologies used to reduce these impacts. These achievements align with the mission of the GLBTS program as outlined by the

US EPA and Environment Canada, and thus serve to illustrate the importance of voluntary sustainability efforts to the success of regional businesses. NYSP2I continues to work with pulp & paper companies in the Great Lakes Basin on different projects.

V. ABOUT THE AUTHOR

Eugene Park serves as Assistant Director of Technical Programs at the New York State Pollution Prevention Institute (NYSP2I) and is part of the Research Faculty in the Golisano Institute for Sustainability at the Rochester Institute of

Table 1: Summary of Project Results

Environmental Impact	Potential Reductions	Actual Reductions
Water	43,350,000 gal/year	16,500,000 gal/year
Wastewater	43,350,000 gal/year	16,500,000 gal/year
Energy (kWH)	481,356 kWH/year	301,148 kWH/year
Energy (therms)	222,444 therms/ year	0 therms/year
Hazardous Waste	6,578 lbs/year	6,578 lbs/year
Toxic Chemical Use	361 lbs/year	361 lbs/year

Technology. His duties include providing direct technical assistance to industry and administering the R&D program at NYSP2I. The NYSP2I is a state-wide research and technology transfer center funded by the New York State Department of Environmental Conservation. The vision for NYSP2I is to foster the transformation and development of sustainable businesses and organizations in New York State in a collaborative program committed to making the State a leader in environmental stewardship. The mission of the Institute is to provide a state-wide, comprehensive, and integrated program of research, technology development and diffusion, outreach, training, and education.

After working several years as a Process Engineer at Sanborn, Inc. (MA) in the area of membrane filtration and centrifugation, Gene helped to start in 1989 one of the country's first state-run university pollution prevention programs in Rhode Island. For over 20 years, Gene served as a Research Professor in the Chemical Engineering Department at the University of Rhode Island and was Co-Director and Director of the URI Center for Pollution Prevention.

Gene's research interests and expertise include membrane filtration, cleaning with less toxic chemicals, and other pollution prevention topics. Gene received his undergraduate and Master's degrees in chemistry and engineering from Dartmouth College prior to receiving his Ph.D. in Chemical Engineering at the University of RI.

VI. REFERENCES

[1] New York State Great Lakes Basin [Map]. (n.d.). In New York State DEC.

[2] The Great Lakes Binational Toxics Strategy. (1997). Retrieved from https://archive.epa.gov/greatlakes/p2/web/pdf/bnssign.pdf

[3] P, G., & A, H. (2002, June). Cancer Risk Assessment, Indicators, and Guidelines for Polycyclic Aromatic Hydrocarbons in the Ambient Air [Abstract]. Environmental Health Perspectives. Retrieved from http://www.ncbi.nlm.nih.gov/pubmed/12060843

[4] Known and Probable Human Carcinogens. (2014, October 02). Retrieved from http://www.cancer.org/cancer/cancercauses/othercarcinogens/generalinformationaboutcarcinogens/known-and-probable-human-carcinogens

[5] TRI Threshold Screening Tool. (2016, February 25). Retrieved July 08, 2016, from https://www.epa.gov/toxics-release-inventory-tri-program/tri-threshold-screening-tool

[6] The Lean and Environment Toolkit [Digital image]. (n.d.). Retrieved from http://www.aicpa.org/InterestAreas/BusinessIndustryAndGovernment/Resources/Sustainability/Pages/EPA_Lean_Environment_Toolkit.aspx

[7] The Lean, Energy and Climate Toolkit. (n.d.). Retrieved July 08, 2016, from https://www.epa.gov/lean/lean-energy-and-climate-toolkit

[8] Nonylphenol and Nonylphenol Ethoxylates. (2010, August 18). Retrieved from https://www.epa.gov/assessing-and-managing-chemicals-under-tsca/nonylphenol-and-nonylphenol-ethoxylates

[9] HUBER Screw Press Q-PRESS®. (n.d.). Retrieved July 08, 2016, from http://www.huber.de/products/sludge-treatment/sludge-dewatering/huber-screw-press-q-pressr.html

[10] Warner, M. A., & Harper, J. V. (1985). Cardiac Dysrhythmias Associated with Chemical Peeling with Phenol. Anesthesiology, (62), 366-367. Retrieved from http://anesthesiology.pubs.asahq.org/article.aspx?articleid=1955515